ISO Registered Company

TECHNICAL BULLETIN

1171-TB
02-20

MODEL 1171
BACK PRESSURE / RELIEF REGULATOR

The Model 1171 is an inexpensive, brass & bronze back pressure/relief regulator designed to handle small to mid capacity flow rates in general service. This unit is capable of controlling inlet pressure to a level between 5 and 200 psig (.34 and 13.8 Barg).

FEATURES

High Stability: High mass plug allows dampening of high frequency disturbances from inlet or outlet side of regulator.

Trim Removal: Easily removable trim from body while in-line by removing screwed-on spring chamber.

Trim Selections: Four different trim combinations for metallic or composition seated designs.

Flow-thru Angle Design 3/8" Size: Two side inlet ports; Bottom outlet port.

Globe design 1/2" Size: One side inlet port; one side outlet port.

APPLICATIONS

Designed to control a wide range of fluids including industrial gases, air, oil, steam and water. See Table 1 for more information. Available for cryogenic service.

CAUTION

This is not a safety device and must not be substituted for a code approved pressure safety relief valve or rupture disc.

STANDARD/GENERAL SPECIFICATIONS

Body Sizes: 3/8" (DN10) NPT.
Angle design: with thru-body connections (2-side inlets; bottom outlet).
Globe Design: 1/2" only - side inlet, side outlet. No bottom connection.

Body Material: Brass - ASTM B151, Alloy C71500.

Spring Chamber: Bronze - ASTM B62, Alloy C83600.

Diaphragms: Phosphorous Bronze, Neoprene (BC) or Fluorocarbon Elastomer (FKM). See Table 3.

Trims: Brass; metal seated or composition seated. See Table 3. See Fig. 2.

Gaskets: Aramid/SBR. Applicable temperature range -20 to +400°F (-29 to +204°C). NOT SUITABLE FOR OXYGEN SERVICE
Alternate material- Opt-45.

Operating Temperatures: See Tables 2 and 3.

Inlet Pressure: Up to 300 psig (20.7Barg) (includes 100 psi (6.9 Bar) pressure build when set at 200 psig (13.8 Barg) under low flow rate). See Table 2.

Range Springs: Standard: Epoxy coated steel.
Cryogenic: SST. See Opt-5.

Spring Ranges	
psig	(Barg)
5 - 30	(.34 - 2.1)
20 - 80	(1.4 - 5.5)
70 - 140	(4.8 - 9.6)
130 - 200	(9.0 - 13.8)

Cv's / Capacities: See Tables 4, 5, 6 and 7.

OPTION SPECIFICATIONS

Option-2: HANDWHEEL. Plastic handwheel for frequent set point changes. See Fig. 1.

Option-5: CRYOGENIC SERVICE. Includes standard brass body and bronze spring chamber. All wetted internal parts are brass or bronze. Range spring is SST. The adjusting screw, spring button and pressure plate are brass. TFE gasketing for diaphragm and pressure plate. Cleaned and packaged for oxygen service per Cashco Spec. #S-1134. The Spring chamber has a 1/8" (DN6) NPT female connection for purge gas plus a 1/8" (3.2 mm) drilled drain hole. Mount in horizontal piping with the adjusting screw oriented downwards. Use B0 or B5 trims. Applicable temperature range -325° to +100°F (-198° to +38°C).

Option-20: DOME LOADING. Spring chamber and range spring replaced by brass dome for external pressure loading up to 100 psig (6.9 Barg); 1/4" (DN8) NPT loading connection. Max. capacity = 0.5 C_v.

Option-22: PANEL MOUNTING. Includes mounting nut and handwheel. See Fig. 1. NOT available with Cryogenic construction.

Option-25: VENT TAP. Spring chamber vent tapped 1/8" (DN6) female NPT for remote venting.

Option-45: TFE GASKETS. Primarily for oxygen service. Limits temperature range to -20° to +400°F (-29° to +205°C).

Option-55: SPECIAL CLEANING. Cleaned per Cashco Spec. #S-1134. With properly selected materials, cleanliness level suitable for oxygen service.

Option-56: SPECIAL CLEANING. Cleaned per Cashco Spec. #S-1542. NOT suitable for oxygen service.

Option-85: INLET GAUGE TAP. 1/4" (DN8) NPT female connection on side of body at inlet connection, for incorporation of gauge. Gauge not included.

TECHNICAL SPECIFICATIONS

TABLE 1
APPLICATIONS

Fluid	Recommended Construction	Trim Designation Number
Air, Inert or Indusrial Gases	Metal Seat & Diaphragm	B0
	Composition Seat & Metal Diaphragm	B5
	Composition Seat & Diaphragm	B3, B4
Cryogenic Gases or Liquids	Metal Seat & Diaphragm	B0
	Composition Seat & Metal Diaphragm	B5
Sour Gas, Chemicals	———————————	NR
Oxygen	Metal Seat & Diaphragm	B0
	Composition Seat & Diaphragm	B4
	Composition Seat & Metal Diaphragm	B5
Water and Condensate	Metal Seat & Diaphragm	B0
	Composition Seat & Metal Diaphragm	B5
	Composition Seat & Diaphragm	B3
Saturated Steam 60 psig (4.1 Barg) & lower[1]	Metal Seat & Diaphragm	B0

[1] Pressure drops above 60 psi (4.1 Bar) can cause accelerated trim and body wear.

TABLE 2
BODY AND SPRING CHAMBER
MAXIMUM PRESSURE WITH TEMPERATURE RATINGS

Materials	Inlet Pressure[1]		Temperature	
	psig	(Barg)	°F	(°C)
Brass Body Bronze Spring Chamber	250	(17.2)	-20 to +400	(-29 to +205)
	300	(20.7)	-20 to +350	(-29 to +177)
	400	(27.6)	-20 to +150	(-29 to +65)
Specified with Option -5	400	(27.6)	-325 to +100	(-198 to +38)

[1] Outlet pressure same as inlet.

TABLE 3
BRASS TRIM MATERIAL COMBINATIONS

Brass Trim Designation Number				
Part	B0	B3	B4	B5
Diaphragm	Phos. Bronze	BC	FKM	Phos. Bronze
Piston	Brass	Brass	Brass	Brass
Piston O-Ring	TFE	TFE	TFE	TFE
Seat[1]	Brass	TFE	TFE	TFE
Seat Screw	---------	Brass	Brass	Brass
Temperature Range	-325 to +500°F	-20 to 180°F	-20 to +400°F	-325 to +200°F
	(-198 to +260°C)	(-29 to +82.6°C)	(-29 to +205°C)	(-198 to +93°C)

[1] The fixed portion of the seat is integral to the body. Indicated seat is the moving portion, and is attached or integral with the piston.

TABLE 4
CAPACITY - Cv
(F_L = 0.95)

Setpoint (P_t) Pressure psig	METAL DIAPHRAGM					COMPOSITION DIAPHRAGM				
	% Build					% Build				
	10%	20%	30%	40%	50%	10%	20%	30%	40%	50%
10	.05	.10	.17	.22	.28	.07	.14	.21	.27	.35
25	.09	.18	.27	.35	.43	.11	.22	.34	.44	.54
50	.09	.18	.27	.35	.43	.11	.22	.34	.44	.54
75	.12	.25	.37	.48	.57	.16	.31	.46	.58	.68
100	.08	.17	.25	.33	.41	.10	.20	.30	.40	.50
125	.09	.18	.27	.35	.43	.11	.22	.34	.44	.54
150	.03	.07	.10	.13	.17	.05	.10	.14	.19	.23
200	.07	.14	.21	.28	.35	.09	.17	.27	.35	.43

METRIC CONVERSION FACTORS: psig / 14.5 = Barg; Cv / 1.16 = kv

TABLE 5
WATER CAPACITY - GPM
S.G. = 1.0 T = 60°F F_L = 0.95
Composition Diaphragm Only

Outlet Pressure (psig)	Setpoint Pressure (psig)	3/8" (DN10) Body				
		% Build				
		10%	20%	30%	40%	50%
ATM	10	0.2	0.5	0.8	1.0	1.4
	25	0.6	1.2	1.9	2.6	CAV
	50	0.8	1.7	CAV	CAV	CAV
	75	1.5	CAV	CAV	CAV	CAV
	100	CAV	CAV	CAV	CAV	CAV
5	10	0.2	0.4	0.6	0.8	1.1
	25	0.5	1.1	1.8	2.4	3.1
	50	0.8	1.6	2.6	CAV	CAV
	75	1.4	CAV	CAV	CAV	CAV
	100	1.0	CAV	CAV	CAV	CAV
	125	CAV	CAV	CAV	CAV	CAV
10	25	0.5	1.0	1.6	2.2	2.8
	50	0.7	1.6	2.5	3.4	CAV
	75	1.4	2.8	CAV	CAV	CAV
	100	1.0	CAV	CAV	CAV	CAV
	125	1.2	CAV	CAV	CAV	CAV
	150	CAV	CAV	CAV	CAV	CAV
15	25	0.4	0.9	1.4	2.0	2.6
	50	0.7	1.5	2.4	3.3	4.2
	75	1.3	2.7	4.2	CAV	CAV
	100	1.0	2.0	CAV	CAV	CAV
	125	1.2	CAV	CAV	CAV	CAV
	150	0.6	CAV	CAV	CAV	CAV
	200	CAV	CAV	CAV	CAV	CAV
25	50	0.6	1.3	2.2	3.0	3.8
	75	1.2	2.5	3.9	5.2	CAV
	100	0.9	1.9	3.1	CAV	CAV
	125	1.2	2.5	CAV	CAV	CAV
	150	0.6	CAV	CAV	CAV	CAV
	200	1.3	CAV	CAV	CAV	CAV

NOTE: Where “CAV” is indicated, the water has reached full cavitation, and flow is choked.

METRIC CONVERSION FACTORS: psig / 14.5 = Barg; GPM x 3.785 = LPM

TABLE 6
AIR CAPACITY - SCFH
S.G. = 1.0 T = 60°F F_L = 0.95
Composition Diaphragm Only

Outlet Pressure (psig)	Setpoint Pressure (psig)	3/8" (DN10) Body				
		% Build				
		10%	20%	30%	40%	50%
ATM	10	60	130	210	270	370
	25	160	350	570	770	1000
	50	270	580	960	1320	1710
	75	550	1150	1830	2460	3060
	100	440	950	1540	2190	2910
	125	590	1280	2130	2960	3870
	150	320	690	1040	1510	1950
	200	750	1530	2630	3660	4800
5	10	60	120	190	260	350
	25	160	350	570	770	1000
	50	270	580	960	1320	1710
	75	550	1150	1830	2460	3060
	100	440	950	1540	2190	2910
	125	590	1280	2130	2960	3870
	150	320	690	1040	1510	1950
	200	750	1530	2630	3660	4800
10	25	160	340	550	750	970
	50	270	580	960	1320	1710
	75	550	1150	1830	2460	3060
	100	440	950	1540	2190	2910
	125	590	1280	2130	2960	3870
	150	320	690	1040	1510	1950
	200	750	1530	2630	3660	4800
15	25	150	310	500	690	880
	50	270	580	950	1310	1700
	75	550	1150	1830	2460	3060
	100	440	950	1540	2190	2910
	125	590	1280	2130	2960	3870
	150	320	690	1040	1510	1950
	200	750	1530	2630	3660	4800
25	50	260	550	900	1240	1610
	75	540	1140	1810	2430	3030
	100	440	950	1530	2190	2910
	125	590	1280	2130	2960	3870
	150	320	690	1040	1510	1950
	200	750	1530	2630	3660	4800

METRIC CONVERSION FACTORS: psig / 14.5 = Barg; SCFH / 35.31 = Sm^3/Hr; SCFH / 37.32 = Nm^3/Hr.

TABLE 7
STEAM - LBS/HR

S.G. = Actual T = Saturated F_L = 0.95

Metal Diaphragm Only

Outlet Pressure (psig)	Setpoint Pressure (psig)	3/8" (DN10) Body				
		% Build				
		10%	20%	30%	40%	50%
ATM	10	2	4	7	10	13
	25	7	13	21	28	35
	50	11	23	35	47	59
	75	20	43	66	89	59
5	10	2	3	6	8	10
	25	6	13	20	27	34
	50	11	22	34	46	58
	75	20	43	66	89	109
10	25	6	12	19	25	32
	50	11	22	34	45	57
	75	20	42	65	87	106
15	25	5	11	17	23	29
	50	10	22	33	45	56
	75	19	42	65	86	106
25	50	10	20	31	42	53
	75	19	41	64	85	104
	100	17	37	56	76	97

METRIC CONVERSION FACTORS: psig / 14.5 = Barg; LBS/Hr x 0.4536 = Kg/Hr.

NOTES

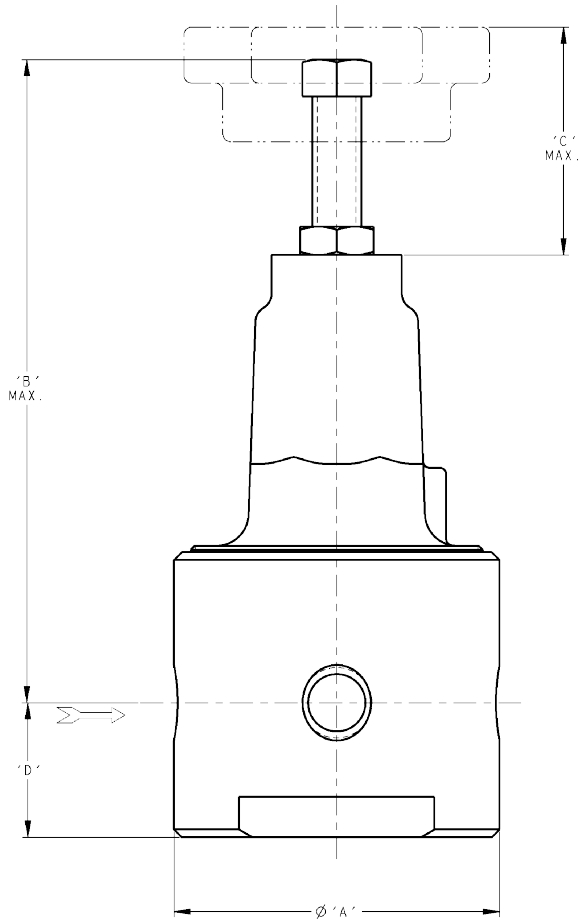

DIMENSIONS AND WEIGHTS

ENGLISH UNITS (inches)					
Option	A	B	C	D	Shipping Weight
Angle 3/8" Size	2.50	4.94	—	1.03	2 lbs.
Globe 1/2" Size	3.00	5.25		0.75	
-2 (Handwheel)	**	5.25 *	—	**	
-20 (Dome Load)	**	2.25 *	—	**	
-22 (Panel Mount)	**	5.25 *	2.25	**	
METRIC UNITS (mm)					
Body Size	A	B	C	D	Shipping Weight
Angle (DN10) Size	65	125	—	26	.91 kgs.
Globe (DN15) Size	76	133		19	
-2 (Handwheel)	**	133 *	—	**	
-20 (Dome Load)	**	57 *	—	**	
-22 (Panel Mount)	**	133 *	57	**	

* When specified with Globe 1/2" size add 0.50 in. (12.7mm).
** Same dimension as "A" & "D" depending on size.

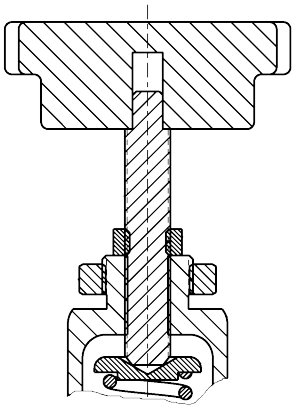

Figure 1: Option -22 Panel Mounting (handwheel portion is same for Option -2 Handwheel) Spring Chamber Thread 3/4" - 16 UNF-2A

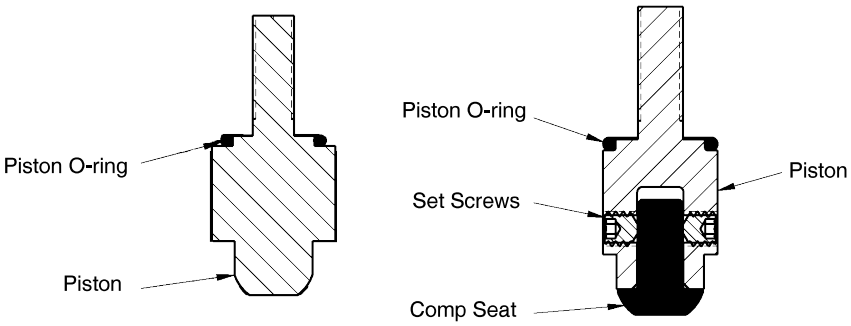

Figure 2:

Metal Seat

Composition Seat

The contents of this publication are presented for informational purposes only, and while every effort has been made to ensure their accuracy, they are not to be construed as warranties or guarantees, express or implied, regarding the products or services described herein or their use or applicability. We reserve the right to modify or improve the designs or specifications of such product at any time without notice.
Cashco, Inc. does not assume responsibility for the selection, use or maintenance of any product. Responsibility for proper selection, use and maintenance of any Cashco, Inc. product remains solely with the purchaser.

MODEL 1171 PRODUCT CODER 02/07/20

An "X" in POS 12 followed by a 5-digit control number overrides remaining selections.

H	POS 2	POS 3	–	3	POS 6 & 7	7	–	1	POS 11	POS 12	POS 13	POS 14	POS 15	POS 16	0	A

POSITION 2 - GASKET * & SERVICE				
Service		Gaskets	Options	CODE
Basic (Above -20°F(-29°C))	Non-Oxygen	Std: Aramid/SBR	—	B
	Primarily for Oxygen	TFE	-45	D
Cryogenic -325 to +100°F (-198 to 38°C)	All	TFE	-5 **	C

* Refer to Tech Bulletin for temperature limits.
** Cryo Const. includes Special Cleaning #S-1134 (Opt.-55).

POSITION 3 - SIZES		
Sizes - in.	(DN)	CODE
3/8" Angle (Two Side inlets with bottom outlet)	(10)	3
1/2" only Globe Design (Side inlet - Side outlet)	(15)	4

POSITION 6 & 7 - TRIM DESIGNATION NUMBERS	
Brass Trim	
Design..	CODE
B0 *	B0
B3	BC
B4	BD
B5 *	BE
* Suitable for Cryogenic Service	

POSITION 11 - RANGE SPRINGS					
STANDARD			CRYO (Opt-5)		
STEEL Range Springs		CODE	SST Range Springs		CODE
psig	(Barg)		psig	(Barg)	
5-30	(.34-2.1)	1	5-30	(.34-2.1)	A
20-80	(1.4-5.5)	2	20-80	(1.4-5.5)	B
70-140	(4.8-9.7)	3	70-140	(4.8-9.7)	C
130-200	(9.0-13.8)	4	130-200	(9.0-13.8)	D
Opt-20Dome Loaded *		Y			

* Not available with Cryogenic Construction.

POSITION 12 - TRIM VARIATIONS		
Description	Option	CODE
No Option	--	0
For Special Construction Contact Cashco for Special Product Code.	SPQ	X

POSITION 13 - FEATURE OPTIONS		
Description	Option	CODE
No Option	-	0
Handwheel *	-2	2
Panel Mounting - Handwheel included *	-22	C

* Not available with Cryogenic Construction.

POSITION 14 - SPRING CHAMBER OPTIONS		
Description	Option	CODE
No Option	-	0
1/8" NPT Vent Tap.	-25	D

POSITION 15 - BODY OPTIONS		
Description	Option	CODE
No Option	-	0
Inlet Gauge Tap - 1/4" NPT (No Gauge).	-85	V

POSITION 16 - CERTIFICATE OPTIONS		
Description	Option	CODE
No Option	-	0
Special Cleaning: Per Cashco Spec #S-1134. Suitable for oxygen service.	-55	M
Special Cleaning: Per Cashco Spec #S-1542.	-56	N

*** For information on ATEX see pages 9 & 10 on the IOM.**

Cashco, Inc.
P.O. Box 6
Ellsworth, KS 67439-0006
PH (785) 472-4461
Fax. # (785) 472-3539
www.cashco.com
email: sales@cashco.com

Cashco GmbH
Handwerkerstrasse 15
15366 Hoppegarten, Germany
PH +49 3342 30968 0
Fax. No. +49 3342 30968 29
www.cashco.com
email: germany@cashco.com

Cashco do Brasil, Ltda.
Al.Venus, 340
Indaiatuba - Sao Paulo, Brazil
PH +55 11 99677 7177
Fax. No.
www.cashco.com
email: brazil@cashco.com

Printed in U.S.A. 1171-TB